RV100 / RL102
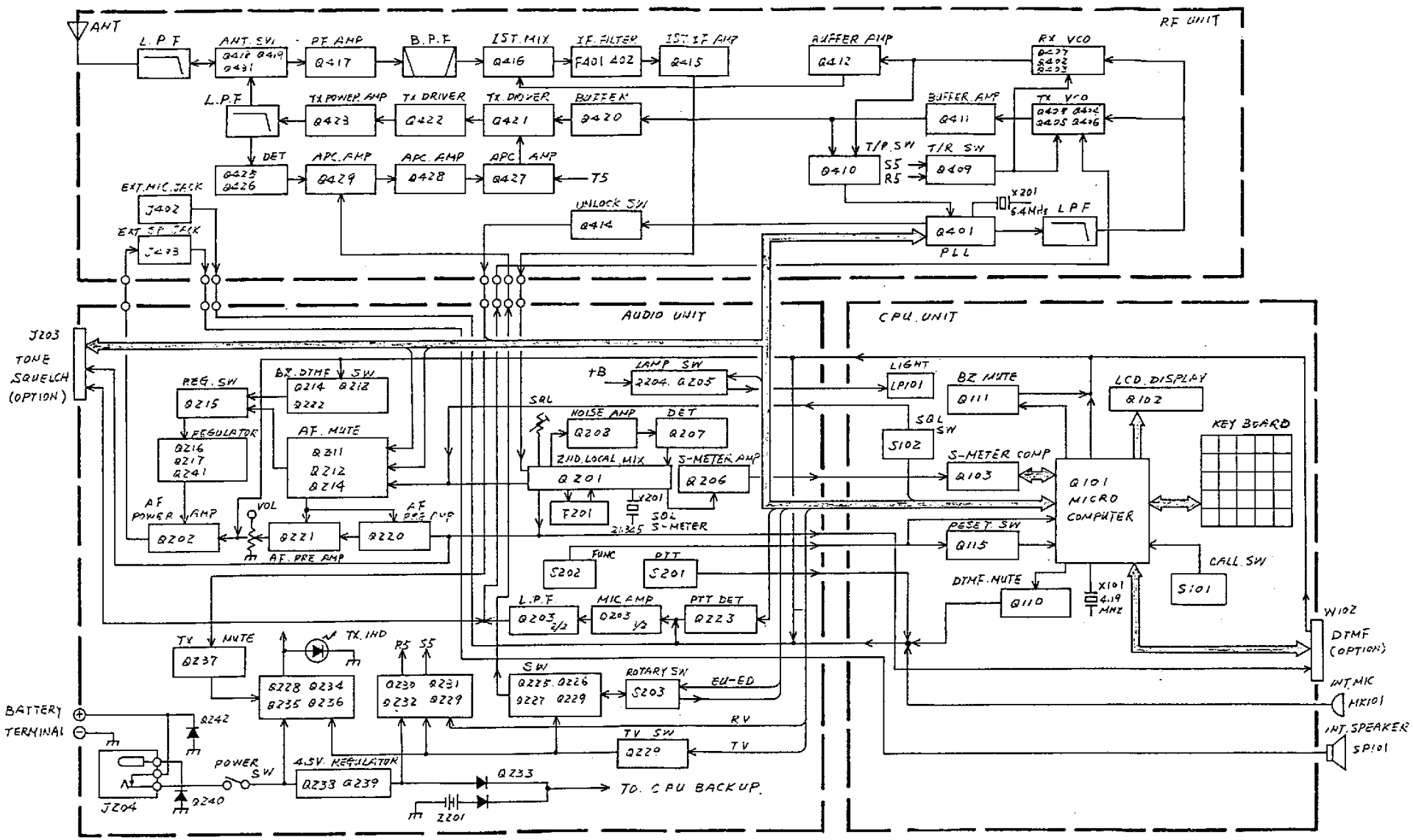
BLOCK DIAGRAM